IOSR Journal of Business and Management (IOSR-JBM)
e-ISSN:2278-487X, p-ISSN: 2319-7668. Volume 27, Issue 12. Ser. 4 (December. 2025), PP 48-58
www.iosrjournals.org

The Impact Of Ethical Leadership On Employee Innovative Behavior: The Mediating Role Of Psychological Empowerment

Md. Mahmudul Islam
Assistant Professor
Department Of Business Administration
International Islamic University Chittagong

Abstract
In a world where technology changes quickly, businesses need to push their employees to be innovative to stay competitive and expand. This research employs social exchange theory and self-determination theory to analyze the influence of ethical leadership (EL) in employee innovative behavior (EIB). Using SmartPLS4, we analyzed data from 308 entry- and mid-level HR staff in Bangladesh across various industry sectors. Analysis used partial least squares structural equation modeling. EL can reveal EIB ($\beta = 0.371$, $t = 6.481$, $p < 0.001$) and PE ($\beta = 0.629$, $t = 20.986$, $p < 0.001$). PE can also enhance EIB ($\beta = 0.339$, $t = 5.187$, $p < 0.001$). EL and EIB are linked via PE ($\beta = 0.213$, $t = 4.852$, $p < 0.001$). Cronbach's alpha was above 0.90, reliability was above 0.91, and AVE was above 0.53 across all categories, making the measurement model a good psychometric tool. Diagnostic validity existed when the HTMT ratio was below 0.85. This model explains 34.1% of EIB and 39.6% of PE variability. This experiment shows how mediation works in a new market. Ethical behavior may reduce cultural barriers to innovation, improving leadership and research. By developing ethical leaders, managerial outcomes empower and inspire new ideas. Cross-sectional designs and general method variance are issues. Future comparisons must be across time and cultures.

Keywords: *Ethical leadership, Psychological empowerment, Employee innovative behavior, Mediation analysis, PLS-SEM, Emerging economies*

Date of Submission: 07-12-2025 Date of Acceptance: 17-12-2025

I. Introduction

Business today must navigate significant volatility, uncertainty, complexity, and ambiguity (VUCA). To enhance their flexibility, maintain a competitive edge, and achieve long-term growth, they increasingly rely on innovative behavior (EIB) from their employees (Amabile & Pratt, 2016; Anderson et al., 2014). Employee Innovative behavior (EIB) among employees means coming up with, promoting, and putting into action new ideas, processes, or products at work (Janssen, 2000; Scott & Bruce, 1994), Such behavior is especially important in developing countries like Bangladesh, where industries like RMGs, IT, and human resource management are facing global demands for innovation despite limited resources and moral issues (Islam et al., 2022; Nasifoglu Elidemir et al., 2020).

Having moral leadership is important (EL). As Brown et al.(2005) say, EL means setting a favorable model in your relationships and actions and getting others to do the same through feedback, decision-making, and two-way communication. Moral leadership is different from other types of leadership because it is honest, fair, open, and looks out for everyone's well-being (Brown & Treviño, 2006; Eisenbeiss, 2012). Ng & Feldman (2015) and AlHalbusi et al. (2022) both found a link between EL and better work outcomes, such as trust, commitment, and success. Some individuals feel a sense of security in ethical leadership (EL), as they are not concerned about the potential consequences of their words or actions (Tu et al., 2019; Javed et al., 2018).

There is still insufficient research on the factors influencing the relationship between emotional intelligence (EL) and employee innovative behavior (EIB), particularly in non-Western contexts (Özsungur, 2019; Ahmed & Khan, 2023). Before Banks et al (2021) and Rasheed et al. (2024), researchers mostly looked at direct effects and not emotional factors. Bangladesh constitutes a big part of this gap. There is a lack of power distance and collectivism, which may make it easier for leaders to break down ladder-based barriers to creation (Hofstede, 2001). But HR issues with ethics show how important it is to have clear goals (Islam et al., 2021).

Psychological empowerment, which includes meaning, competence, self-determination, and authority, provides a way to link the two (Spreitzer, 1995). Blau (1964) suggests that pleasant interactions between leaders and followers enhance reciprocity in social exchange theory. Self-Determination Theory (SDT) (Deci & Ryan, 2000; Gagné & Deci, 2005) asserts that ethical leaders foster follower empowerment by providing autonomy and support, thereby boosting motivation. Employees who think they are capable and independent are more

likely to be creative (Seibert et al., 2011; Zhang & Bartol, 2010). According to Brown and Mitchell (2010) and Liu et al. (2023), process-oriented research is particularly important for human resource professionals who have an impact on the operations of organizations and the strategies that are used for innovation.

This study looks at how ethical leadership affects innovative employee behavior and psychological empowerment, as well as how psychological empowerment affects innovative employee behavior. It focuses on entry- and mid-level HR professionals in Bangladesh. This study contributes to the existing research on leadership by examining its dynamics in a developing country, addressing the demand for more varied samples (Tu et al., 2019; Abuzaid et al., 2024). These findings offer significant insights into promoting creativity in human resource-driven environments.

II. Literature Review And Hypotheses Development

Ethical Leadership

Ethical leadership is an important part of research on how people have at work. It shows how important morality, honesty, and fairness are in leaders (Brown & Treviño, 2006). The authors Brown et al. (2005) say that EL is showing followers how to behave in a way that is morally right through actions and interactions with other people. EL is comprised of executives as well as individuals who are ehical. Ethical managers can uphold ethical standards by setting objectives, incentivizing commendable conduct, and sanctioning inappropriate actions (Eisenbeiss, 2012).

According to Blau, (1964) the social exchange theory proposes that ethical leaders cultivate strong relationships with their followers that are founded on respect, empathy, and reciprocal advantage. Individuals experiencing such treatment demonstrate positive attitudes and behaviors, encompassing ethical conduct, creativity trust, and, loyalty (Ng & Feldman, 2015; Al Halbusi et al., 2023). Ethical leaders make sure that power isn't abused, that everyone feel safe, and that decisions are made fairly. Brown & Mitchell (2010) say that these traits are necessary to spark new ideas and promote open communication.

Creativity is a big motivator for EL, Ethical leaders reduce the likelihood of employees' fear of negative outcomes when they suggest unconventional ideas, take calculated risks, and question the status quo (Javed et al., 2019; Dhar, 2016).These leaders' value integrity and equity, which encourage exploring new ideas and finding creative solutions (Tu et al., 2019). Power distance and hierarchical structures accentuate the significance of innovation in poor countries like Bangladesh (Islam et al., 2021). Therefore, EL ought to foster employee creativity.

Psychological Empowerment

Psychological empowerment (PE) is a motivating condition that shows employees' intrinsic engagement with their roles through meaning, competence, self-determination, and influence (Spreitzer, 1995). According to self-determination theory, autonomy, competence, and relatedness boost intrinsic motivation and self-directed behavior (Deci & Ryan, 2000). A person who is empowered values their work, believes they possess the necessary skills, is able to make decisions independently, and is aware that their actions have an impact on the outcomes of the organization.

Having ethical leaders is a big part of promoting PE. Some ways that ethical leaders share their power are by treating everyone fairly, letting everyone have a say in decisions, and being open with everyone (Dust et al., 2018). They make workplaces where workers feel trusted, admired, and valued, which makes them feel independent and capable (Mubarak et al., 2022). Abuzaid et al. (2024) state that ethical leaders clarify expectations and provide moral guidance, thereby reducing uncertainty and role conflict-common barriers to empowerment.

Empowerment is very important infields that use many human resources (HR) because HR workers often work in changing environments that need privacy, problem-solving, and new ideas. Ethical leadership is thought to provide workers more psychological power, which in turn motivates them to use their skills to make creative contributions and improve performance.

Employee Innovative Behavior

When employees come up with, promote, and carry out new ideas that make the company's processes, goods, or outcomes better, that is called innovative behavior (EIB) (Scott & Bruce, 1994; Janssen, 2000). Innovation isn't just new technologies: it also includes changes to HR practices, process improvements, policy formulation, and strategy shifts. EIB is essential for business that work in VUCA settings, where being able to adapt and keep getting better are what make them competitive (Anderson et al., 2014).

Because EIB involves risk, uncertainty, and possible resistance, it depends a lot on things like leadership style, psychological states, and the climate of the company (Amabile & Pratt, 2016). In cultures with a lot of hierarchy and power distance, like Bangladesh, workers may be hesitant to say what they think or

question what is expected of them. Therefore, beneficial leadership and giving people the power to make decisions are two main ways that innovative before starts.

Employees that feel psychologically empowered are more intrinsically motivated, more likely to come up with and support new ideas when they feel free and capable (Zhang & Bartol, 2010). Consequently, ethical leadership and psychological empowerment are anticipated enhance employee inventive behavior substantially.

Hypotheses Development

The following ideas about the connections between ethical leadership, psychological freedom, and employees' creative behavior are based on the theories of SET and SDT and are backed up by real-world research:

H1: Ethical leadership has a positive direct effect on employee innovative behavior.

Moral leaders support creativity by building trust, being fair, and making people feel safe. Previous research has indicated that EL has a big effect on creativity and innovation by lowering the fear of failing and encouraging speaking behavior (Walumbwa et al., 2011; Dhar, 2016).

H2: Ethical leadership has a positive direct effect on psychological empowerment.

Moral behavior, involvement in decisions, and ongoing support are some of the ways that ethical leaders provide their employees a feeling of purpose, competence, autonomy, and impact (Tu & Lu, 2013; Sarwar et al., 2023). In this way, EL should make PE stronger.

H3: Psychological empowerment has a positive direct effect on employee innovative behavior.

When workers are empowered, they are naturally motivated and sure of themselves enough to question the status quo, come up with new ideas, and solve problems in creative ways. A lot of research has indicated that PE makes people more creative and innovative in a wide range of business settings (Gagné & Deci, 2005; Seibert et al., 2011).

H4: Psychological empowerment mediates the relationship between ethical leadership and employee innovative behavior.

Ethical leaders inspire their teams by meeting their emotional needs and creating important connections, which in turn encourage creative behavior. Asif et al. (2019) and Liu et al. (2023) have found that one of the main ways that leadership affects innovation is by giving people more freedom. As a result, PE is suggested as away to help.

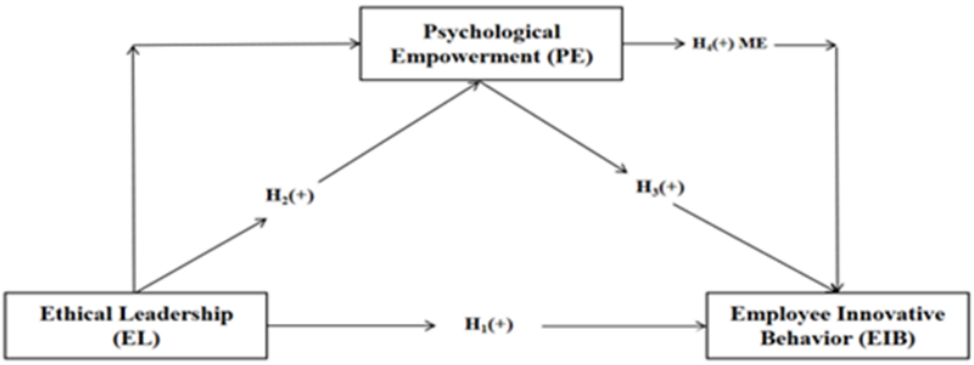

Figure 1 : The Coneptual Framework, Source : Authors

Figure 1: Conceptual Framework

III. Methodology

Research Design, Sample, and Procedure

To reduce common method bias, this study used a time-lagged poll method and a quantitative, cross-sectional research design (Podsakoff et al., 2003). The data were gathered in two stages. At time 1, people were asked to rate their views of ethical leadership (EL). About two weeks later, at Time 2, the same people were asked to complete measures of psychological empowerment (PE) and employee innovative behavior (EIB). This separation in time helped cut down on consistency errors and responder fatigue.

A method called "purposive sampling" was used to identify entry-level and mid-level human resources workers in the private sector of Bangladesh, working in areas like manufacturing and service. HR workers were thought to be a suitable fit because their jobs provide them direct access to leadership interactions and activities related to innovation. Through HR groups, professional LinkedIn groups, and company networks, an online survey was sent out.

In total, 400 responses were sent in during both stages, 308 valid responses were retained for analysis after cases that were ineligible or incomplete were eliminated. Respondents were told they would remain anonymous if they chose to take part. The institutional review board gave their ethical approval, and informed consent was electronically received before the data was collected.

Measures

A five-point Likert scale (1= strongly disagree, 5= strongly agree) and validated scales were used to measure all categories. The nine item Ethical Leadership (EL) scale, which was made by Brown et al. (2005), was used to measure EL. One example is "My boss makes decisions that are fair and balanced". Cronbach's α = 0.919 showed that the scale was very reliable. This approach provides individuals with psychological power (PE). Spreitzer's (1995) eight-item scale was used to grade PE. It measured meaning, competence, self-determination, and effect. An example item from the scale is, "I care a lot about the work I do." The confidence of this construct was also very high (Cronbach's α = 0.919). Employees exhibited innovative behavior (EIB). The nine-item scale created by Janssen (2000) was used to measure EIB. "I often bring new ideas to my workplace" is an example of innovative employee behavior, (Cronbach's α = 0.909 shows that this measure was very reliable. To put the group in its proper context, demographic information like age, gender, job level, experience, and industry was gathered.

Analytical Strategy

I used SmartPLS 4 and and Partial Least Squares Structural Equation Modeling (PLS-SEM) to look at the data, following the steps given by Hair et al. (2019). PLS-SEM was chosen for its ability to do predictive research, handle non-normal data, and analyze complex interactions.

IV. Results

Demographic Profile of Respondents

Table 1: Demographic Characteristics

Characteristic	Category	Frequency	Percentage (%)
Gender	Male	186	60.4
	Female	122	39.6
Age	18-25	78	25.3
	26-35	146	47.4
	36-45	62	20.1
	46+	22	7.1
Education	High School	45	14.6
	Bachelor's	163	52.9
	Master's	85	27.6
	PhD	15	4.9
Tenure	<1 year	68	22.1
	1-5 years	133	43.2
	6-10 years	75	24.4
	>10 years	32	10.4

Table 1 displays the demographic of the 308 individuals who participated in the poll. The group is mostly made up of male employees (60.4%), with only 39.6% of the total being female respondents. When it comes to age, the largest group of respondents is between the ages of 26 and 356 (47.4%), followed by those between the ages of 18 and 25 (25.3%). People aged 36 to 45 make up 20.1% of the employees, and people aged 46 and up make up 7.1%. the group is mostly made up of early- or mid-career professionals, based on this distribution.

In terms of schooling, 52.9% of the participants have a bachelor's degree or higher, and 27.6 % have a master's degree or higher. A smaller group (14.6%) said they only had high school education, and only 4.9% hold a PhD. this indicator shows that the workforce is mostly well-educated.

A person's work history (tenure) also shows a lot of variety. About 43.2% of those who answered have worked for the same company for one to five years. About 24.4% have been with the company for 6-10 years, while 22.1% are new workers with less than one year of experience. 10.4% of people have worked for more than 10 years. Based on the distribution, it looks like most of the sample members are early- to mid-career workers.

Measurement Model Assessment: Indicator Loadings

Table 2: Outer Loadings

Items	Description	Outer Loadings
EIB		
EIB1	My supervisor can be trusted.	0.816
EIB2	My supervisor listens to what employees have to say.	0.659
EIB3	My supervisor defines success not just by results but also the way that they are obtained.	0.660
EIB4	My supervisor disciplines employees who violate ethical standards.	0.766
EIB5	My supervisor conducts his/her personal life in an ethical manner.	0.758
EIB6	My supervisor has the best interests of employees in mind.	0.716
EIB7	My supervisor makes fair and balanced decisions.	0.787
EIB8	My supervisor discusses business ethics or values with employees.	0.726
EIB9	My supervisor sets an example of how to do things the right way in terms of ethics.	0.744
EL		
EL1	I often introduce new ideas into my work environment.	0.752
EL2	I often generate original solutions to problems.	0.671
EL3	I often search out new technologies, processes, techniques, and/or product ideas.	0.823
EL4	I often mobilize support for innovative ideas.	0.776
EL5	I often try to persuade others to champion innovative ideas.	0.800
EL6	I often make important people enthusiastic about new ideas.	0.712
EL7	I often assist in the implementation of new ideas.	0.718
EL8	I often assist in the implementation of new working methods, techniques, or instruments.	0.784
PE		
PE1	The work I do is very important to me.	0.738
PE2	My job activities are personally meaningful to me.	0.720
PE3	I am confident about my ability to do my job.	0.689
PE4	I have mastered the skills necessary for my job.	0.710
PE5	I have significant autonomy in determining how I do my job.	0.682
PE6	I can decide on my own how to go about doing my work.	0.852
PE7	I have considerable opportunity for independence & freedom in how I do my job.	0.780
PE8	I have significant influence over what happens in my department.	0.775

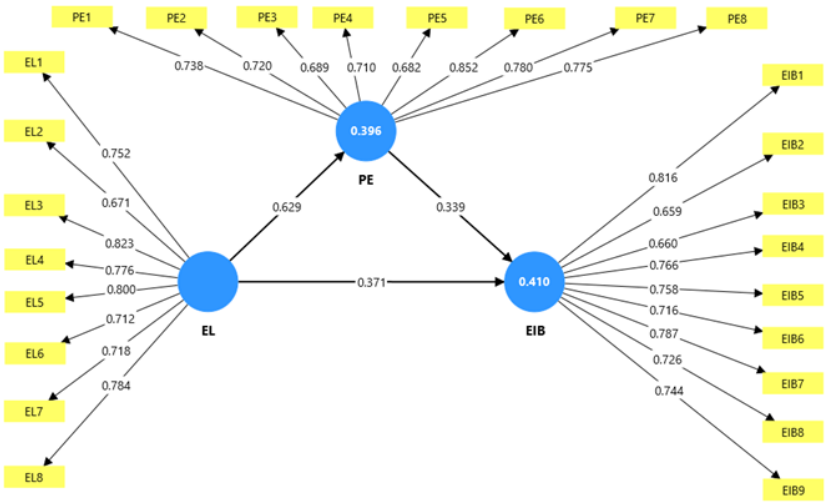

Figure 2: Measurement Model (Outer Loadings)

Table 2 and Figure 2 display the outer loadings for all survey items in the three constructs. These are for Ethical Leadership (EL), Employee Innovative Behavior (EIB), and Psychological Empowerment (PE). As a first step toward proving convergent validity in the measurement model, outer loadings measure how well each indicator matches its underlying latent construct.

According to Hair et al. (2019, 2021), item reliability is satisfactory if the loadings are ≥ 0.70. Values between 0.65 and 0.70 are also satisfactory as long as the construct's AVE and composite reliability meet the necessary limits. Usually, things with loadings below 0.40 should be thrown away, but none of these do.

With loadings ranging from 0.659 to 0.823, all nine EIB measures show satisfactory reliability. A few items (EIB2 and EIB3) load slightly below the ideal 0.70 threshold, but they are still within the acceptable range (>0.65), so they should be kept because they are theoretically relevant and the construct-level convergent validity was strong (AVE > 0.50). Items with higher loads, like E1B1 (0.816) and E1B4 (0.766), make the structure stronger.

The nine items that define ethical leadership have loadings that are all higher than the acceptable reliability cutoffs, ranging from 0.671 to 0.821. EL3 (0.823) an EL% (0.800) are strong signs that show the construct has a satisfactory empirical representation. The loading pattern supports both the conceptual range and internal consistency of the EL scale., so no items were taken out.

The loadings of all eight items used to measure psychological strength are satisfactory, falling between 0.682 and 0.852. PE6 (0.852) and PE7 (0.780) stand out as especially strong indicators, which fits with Spreitzer's (1995) four-part model of empowerment: meaning, competence, autonomy, and effect. Indicators that are just below 0.70 (PE3, PE5) are acceptable, especially since the construct got a high AVE and composite reliability.

Reliability (Cronbach's Alpha, CR, rho_A)

Table 3: Reliability (Cronbach's Alpha, CR, rho_A)

	Cronbach's alpha	*Composite reliability (rho_a)*	*Composite reliability (rho_c)*	*Average variance extracted (AVE)*
EIB	0.895	0.897	0.915	0.546
EL	0.893	0.902	0.914	0.572
PE	0.884	0.888	0.908	0.555

Table 3 shows that all three constructs -EIB,EL and PE demonstrate strong reliability and convergent validity. Cronbach's alfa values (0.884-0.895) and composite reliability scores for both rho_a and rho_c (0.888-).915) are well above the 0.70 threshold, confirming excellent internal consistency. The AVE values (0.546-0.572) also exceed the 0.50 level indicating that each construct explains more than half of the variance in its indicators. These results confirm that the measurement model is reliable and exhibit satisfactorily convergent validity.

Collinearity Statistics (VIF)

Table 4: Collinearity Statistics (VIF)

Path	Inner VIF
EL -> EIB	1.654
EL -> PE	1.000
PE -> EIB	1.654

Table 4 displays the data for collinearity using Variance Inflation Factor (VIF) values for the inner model. It's important to note that all of the VIF values are below the normal level of 5.0 (Hair et al., 2021). This means thatb there is no multicollinearity between the predictor constructs. In particular, the VIF values for the paths EL → EIB and PE →EIB are 1.654, while the VIF values for EL → PE is 1.000. this indicates that the predictor's don't have any issue with collinearity and can be used for structural model evaluation.

Discriminant Validity: Fornell–Larcker Criterion

Table 5: Discriminant Validity (Fornell-Larcker Criterion)

Construct	EIB	EL	PE
EIB	0.728		
EL	0.584	0.755	
PE	0.552	0.629	0.735

Table 5, displays the results of the Fornell–Larcker discriminant validity test. The standard says that the square root of the Average variance Extracted (AVE) for each construct shares more variation with its own indicators than with other hidden variables. This indicates that the constructs are discriminantly valid.

Discriminant Validity: HTMT Criterion

Table 6: HTMT Ratio

Construct	EIB	EL	PE
EIB			
EL	0.680		
PE	0.640	0.710	

The Heterotrait–Monotrait (HTMT) ratios of relationships are shown in table 6. The means that all of the HTMT values are below the safe level of 0.85 that is suggested for conceptually different constructs (Henseler et al., 2015). In particular, the HTMT values for EIB-EL (0.680), EIB-PE (0.640), and EL-PE (0.710) all show that the discriminant validity is satisfactory. These results indicate that the models can be distinguished from each other in the real world.

Structural Model Results

Table 7: Structural Model (Path Coefficients)

Path	β	T-value	p-value
EL -> EIB	0.371	6.481	<0.001
EL -> PE	0.629	20.986	<0.001
PE -> EIB	0.339	5.187	<0.001

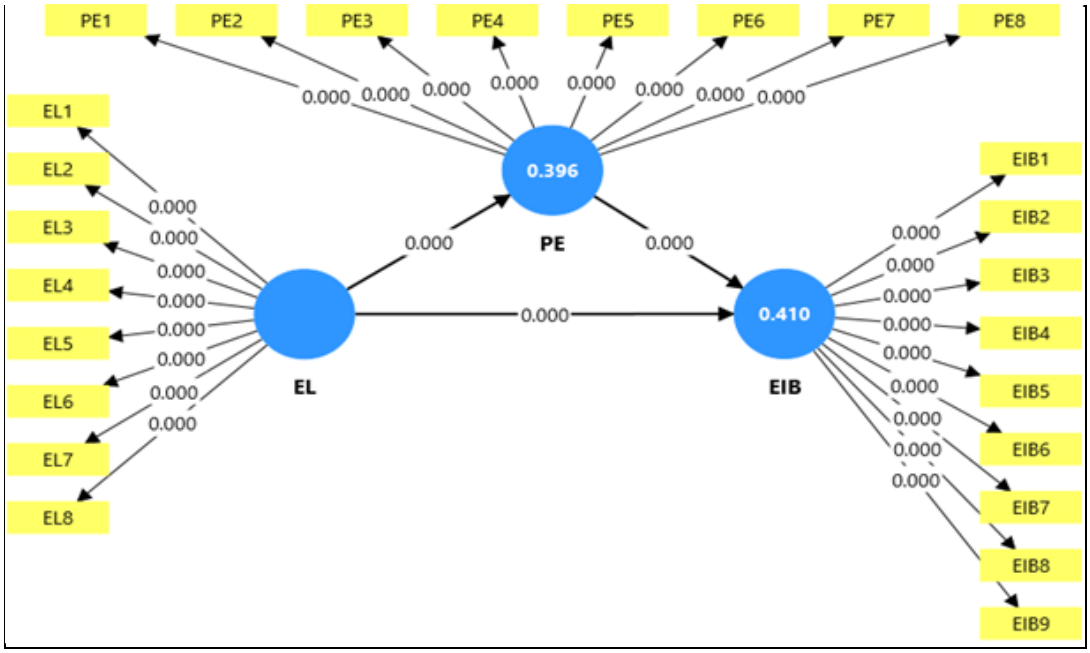

Figure 3: Structural Model Results

Table 7 and Figure 3 show the results of the structural model. These include standardized path coefficients (β), t-values, and significance levels that were found using the bootstrapping method with 5,000 new samples. All the hypothesized paths were statistically significant at $p < 0.001$, which means that the supposed relationships are very likely to be true.

The link between ethical leadership (EL) and employee innovative behavior (EIB) was positive and significant (β = 0.371, t= 6.481), showing that employees who have higher amounts of EL are more likely to act in innovative ways. Also, EL had a big positive effect on psychological empowerment (PE) (β = 0.629, t = 20.986), which was the strongest relationship in the model. This is in line with the idea that ethical leaders help their workers become more motivated and able to think critically.

Also, PE strongly predicted EIB (β = 0.339, t = 5.187), showing that workers who are given more freedom are more likely to be involved in coming up with ideas, solving problems, and coming up with new

products. Hair et al. (2019) say that t-values above 1.96 show statistical significance at the 0.05 level. This means that the much higher t-values seen in this study show strong path relationships.

All of these results support the structural model and show that psychological empowerment is a key factor in the link between ELs and EIBs.

Mediation Analysis

Table 8: Mediation Analysis

Path	Indirect Effect (β)	T-value	p-value	95% CI (Bias-Corrected)
EL -> PE -> EIB	0.213	4.852	<0.001	[0.128, 0.301]

The findings of the interaction analysis can be seen in Table 8. The way they show it is through PE, EL affects innovative behavior of employees (EIB). The indirect effect appears to be positive and satisfactory significant ($\beta = 0.213$, $t = 4.852$, $p < 0.001$). Since the 95% confidence interval doesn't go all the way to zero, there is a real indirect association.

According to the results, PE is a very important mediator between EL and EIB. This suggests that leaders who are ethical can encourage innovative behavior by giving their employees more purpose, skill, freedom, and power in their jobs. Zhao et al. (2010) describe the mediation as the "partial mediation" due to sustained significance of both the direct effect (EL → EIB) and the indirect effect during the mediation process. This findings shows that EL has two effects on EIB: one direct and one indirect.

Total Effects

Table 9: Total Effects

Path	Total Effect (β)	T-value	p-value
EL -> EIB	0.584	11.250	<0.001
EL -> PE	0.629	20.986	<0.001
PE -> EIB	0.339	5.187	<0.001

The results from the structural model pathways can be seen in Table 9. It shows both direct and indirect effects. It shows effects that happen both straight on and through other things. There is a strong link between ethical leadership (EL) and employees innovative behavior (EIB), as shown by the positive and statistically significant results ($\beta = 0.584$, $t = 11.250$, $p < 0.001$). this conclusion as a whole shows that ethical leadership changes how people act when they hear new ideas. EL leads to EIB, which is the direct path, and PE is the indirect path that helps people feels more powerful.

It was found that EL had a big impact on PE ($\beta = 0.629$, $t = 20.986$, $p < 0.001$). This means that EL is a key factor in determining how motivated and empowered workers will be. It was also obvious that the link between PE and EIB was important ($\beta = 0.339$, $t = 5.187$, $p < 0.001$). Individuals who have a greater sense of mental strength are, consequently, more creative in their professional lives.

It is said by Hair et al. (2019) that substantial total effects show how strongly hidden variables are connected when they look at both direct and indirect effects within a model. it looks like the effects are strong and stable because the t-value for each path is high.

Coefficient of Determination (R^2 and Adjusted R^2)

Table 10: Coefficient of Determination

Construct	R^2	R^2 Adjusted
Psychological Empowerment (PE)	0.396	0.394
Employee Innovative Behavior (EIB)	0.341	0.337

It is looked at the coefficient of determination (R^2) and the corrected (R^2) numbers in Table 10 to determine how well the structural model explained things. According to the standards set by Hair et al. (2019), the model only had a moderate ability to recognize both endogenous constructs.

There was a 0.396 R^2 value for psychological empowerment (PE) and a 0.394 R^2 value after adjustments. This means that ethical leadership (EL) explains 39.6% of the differences in PE. This shows that ethical leadership (EL) is a major predictor of how psychologically empowered are. This accord with ideas that say ethical leadership is important for inspiring employees.

The R^2 value for innovative behaviors among employees was 0.341(adjusted $R^2 = 0.337$), which means that EL and PE together explain 34.1% of its variance. Behavioral scientists believe that R^2 values in the range of 0.25 to 0.50 are normal. In other words, the results means the model can explain enough to make good predictions.

V.Discussion

The purpose of this study was to examine the relationship between ethical leadership and employee innovative behavior, with the target of improving interpersonal interactions through the application of psychological empowerment. Based on the findings, it appears that all of the anticipated associations are consistent. In particular, they propose significant and practical insights into leadership and creativity, particularly in developing countries.

EL significantly increases EIB (H1: $\beta = 0.371$, $t = 6.481$, $p < 0.001$), indicating that ethical leaders promote creativity among their workforce. According to Social Exchange Theory, followers have a duty and a desire to follow leaders who are honest and fair (Walumbwa et al., 2011; Javed et al., 2019). The perception of equity, integrity, and exemplary behavior among employees make them more likely to take on additional responsibilities. These responsibilities include conducting research on new products, coming up with ideas, and finding solutions to problems. The existing understanding of Western markets (Dhar, 2016; Tu et al., 2019) can be applied to a new South Asian Market ethical leadership is important for cultivating innovative ideas, particularly in environments characterized by significant power disparities and a robust sense of community (Hofstede, 2001). The effect is significantly larger than other studies (e.g., Sarwar et al., 2023, $R^2 = 0.30$), which is intriguing. Time-lagged design may have reduced technique bias and helped the casual effect.

The results indicate that ethical leaders encourage their employees to feel accomplished, competent, impactful, and autonomous, and that EL has a significant influence on PE (H2: $\beta = 0.629$, $t = 20.986$, $p < 0.001$). A key principle of self-determination theory is the belief that leaders can inspire their followers to pursue their own personal goals (Deci & Ryan, 2000; Dust et al., 2018). There is evidence to support the Self-Determination Theory. Just leaders provide their people the power to make decisions by being honest, treating everyone fairly, and establishing trust. Bangladeshi firms with numerous organizational levels prioritize this attribute because of the limited options limited (Mubarak et al., 2022).

Liu et al., 2023 and Özsungur, (2019) both look at workplace empowerment from outside of Western countries. The higher β-value for EL→PE suggests that ethical behavior may have a bigger effect o people in collectivist cultures, where leaders show others how to behave properly and encourage personal growth. There are strong links between PE and EIB, which suggests that employees who have more freedom are more likely to be in charge of new projects (H3: $\beta = 0.339$, $t = 5.187$, $p < 0.001$). When employees are given the chance to come up with and implement new ideas, they show more competence (Seibert et al., 2011; Zhang & Bartol, 2010). In Bangladesh, where hierarchical values may make people less likely to take risks, physical education promotes initiative and being proactive.

Although the effect size of this study is consistent, it is slightly lower than in highly individualistic contexts (Gagné & Deci, 2005; Asif et al., 2019). This suggests that cultural factors such as collectivism may moderate the empowerment-innovation link. This is because employees may consider group norms and approval before punishing novel ideas.

We found that PE explains the connection between EL and EIB (H4: indirect $\beta = 0.213$, $t = 4.852$, $p < 0.001$; 95% CI [0.128, 0.301]). EIB is indirectly affected by ethical leadership by 36% ($\beta = 0.584$), which encourages new ideas and gives people more power. Some ideas, like process-oriented theories (Brown & Mitchell, 2010; Liu et al., 2023) say that moral cues can motivate workers but don't make them creative. The findings are comparable to those obtained from economies that are still in the process of developing (Ahmed & Khan, 2024b; Özsungur, 2019). However, they differ from those obtained from the western world (Zhang & Bartol, 2010), which demonstrates the exceptional nature of the situation. Direct leadership may be able to assist people in Bangladesh, which is a collectivist country, in becoming more creative and self-sufficient.

Both the changes in PE ($R^2 = 0.396$) and the changes in EIB ($R^2 = 0.341$) can be explained by the model. The model explains 39.6% of the changes in PE. Cohen (1988) has established that this regression model satisfies the criteria for behavioral research, and it possesses a moderate capacity to explain things. Researchers who first looked into PLS_SEM in innovation and human resources (Sarwar et al., 2023; Liu et al., 2023) found values that are equal to or higher than these numbers. The moderate R^2 for EIB indicates that workplace and environmental factors, including organizational culture, reward mechanisms, and team dynamics, may also influence innovation.

VI. Conclusion

Through psychological empowerment, a study was done to look into the link between EL and EIB. I conducted research on human resource profession in Bangladesh, and the findings unequivocally demonstrate that EL has an effect on both EIB and PE, acting as a mediator between the two effects. Ethical leaders indirectly encourage creativity in their organizations by giving their followers a sense of purpose, freedom, competence and impact. It was the reason for 39.6% of the changes in PE and 34.1% of the changes in EIB. It's clear that ethical leadership is important for coming up with new ideas because the predictor was so accurate.

Theoretical Implications

The theoretical discourse is considerably advanced by the manuscript. This research looks at emerging markets through the theoretical framework of Self-Determination theory and social exchange theory. Ethical leadership boosts innovative ideas that are beneficial to all, motivated by individual needs. Incorporating psychological empowerment into mediation enhances our understanding of ethical leadership and fosters innovative concepts. There exists a disparity in collectivist societies such as Bangladesh, characterized by significant power distance.

Practical Implications

Based on the results, managers should receive training in ethics-based leadership. Leaders who are fair, honest, and trustworthy earn the trust on their employees and let them think and grow on their own. Individuals who work in human resources help employees make choices, receive credit for their accomplishments, and have meaningful work experiences that boost confidence. These strategies get employees more involved and encourage new ideas, which give companies that are always changing the boundary.

Limitations and Future Research Directions

The study raises some questions, but it also adds to what is already known. The cross-sectional, time – lagged design fails to effectively demonstrate the casual relationship effectively between events. Secondly, employing self-reported measurements may result in social desirability bias, despite efforts to mitigate it, such as temporarily separating respondents. The sample consisted solely of entry-level and mid-level employees in Bangladesh. This indicates that the findings may not be relevant to other sectors, nations, or senior management levels. In the future, researchers may employ longitudinal or experimental methodologies to strengthen primary conclusions and avoid these issues. Cross-cultural comparisons can reveal how cultural values like power distance and collectivism affect EL, PE, and EIB. We could learn more about how ethical leadership encourages creativity by looking into factors that affects teams or organizations. Like the creative environment, leadership styles that work well together, or reward systems. Ultimately, incorporating other psychological safety or intrinsic incentive could enhance the comprehensiveness of the theory.

References

[1]. Özsungur, F. (2019). The Impact Of Ethical Leadership On Service Innovation Behavior: The Mediating Role Of Psychological Capital. Asia Pacific Journal Of Innovation And Entrepreneurship, 13(1), 73-88. Https://Doi.Org/10.1108/APJIE-12-2018-0073

[2]. Ahmed, M., & Khan, M. I. (2023). Beyond The Universal Perception: Unveiling The Paradoxical Impact Of Ethical Leadership On Employees' Unethical Pro-Organizational Behavior. Heliyon, 9(11). Https://Doi.Org/10.1016/J.Heliyon.2023.E21618

[3]. Ahmed, M., & Ishfaq Khan, M. (2024). Unpacking The Paradoxical Impact Of Ethical Leadership On Employees' Pro-Social Rule-Breaking Behavior: The Interplay Of Employees' Psychological Capital And Moral Identity. Plos One, 19(8), E0306912. Https://Doi.Org/10.1371/Journal.Pone.0306912

[4]. Abuzaid, A. N., Ghadi, M. Y., Madadha, S.-A. M., & Alateeq, M. M. (2024). The Effect Of Ethical Leadership On Innovative Work Behaviors: A Mediating–Moderating Model Of Psychological Empowerment, Job Crafting, Proactive Personality, And Person–Organization Fit. Administrative Sciences, 14(9), 191. Https://Doi.Org/10.3390/Admsci14090191

[5]. Alhalbusi, H., Tang, T. L. P., Williams, K. A., & Ramayah, T. (2022). Do Ethical Leaders Enhance Employee Ethical Behaviors? Organizational Justice And Ethical Climate As Dual Mediators And Leader Moral Attentiveness As A Moderator—Evidence From Iraq's Emerging Market. Asian Journal Of Business Ethics, 11, 105-135. Https://Doi.Org/10.1007/S13520-022-00143-4

[6]. Alhalbusi, H., Alhaidan, H., Ramayah, T., & Alabri, S. (2023). Ethical Leadership And Employees' Ethical Behavior: Modeling The Contingent Role Of Moral Identity. Business And Professional Ethics Journal, 42(1), 1-31. Https://Doi.Org/10.5840/Bpej202344135

[7]. Amabile, T. M., & Pratt, M. G. (2016). The Dynamic Componential Model Of Creativity And Innovation In Organizations: Making Progress, Making Meaning. Research In Organizational Behavior, 36, 157-183. Https://Doi.Org/10.1016/J.Riob.2016.10.001

[8]. Anderson, N., Potočnik, K., & Zhou, J. (2014). Innovation And Creativity In Organizations: A State-Of-The-Science Review, Prospective Commentary, And Guiding Framework. Journal Of Management, 40(5), 1297-1333. Https://Doi.Org/10.1177/0149206314527128

[9]. Asif, M., Qing, M., Hwang, J., & Shi, H. (2019). Ethical Leadership, Affective Commitment, Work Engagement, And Creativity: Testing A Multiple Mediation Approach. Sustainability, 11(16), 4489. Https://Doi.Org/10.3390/Su11164489

[10]. Bai, Y., Lin, L., & Liu, J. T. (2017). Leveraging The Employee Voice: A Multi-Level Social Learning Perspective Of Ethical Leadership. The International Journal Of Human Resource Management, 30(12), 1869–1901. Https://Doi.Org/10.1080/09585192.2017.1308414

[11]. Banks, G. C., Fischer, T., Gooty, J., & Stock, G. (2021). Ethical Leadership: Mapping The Terrain For Concept Cleanup And A Future Research Agenda. The Leadership Quarterly, 32(2), 101471. Https://Doi.Org/10.1016/J.Leaqua.2020.101471

[12]. Blau, P. M. (1964). Exchange And Power In Social Life. Wiley.

[13]. Brown, M. E., & Mitchell, M. S. (2010). Ethical And Unethical Leadership: Exploring New Avenues For Future Research. Business Ethics Quarterly, 20(4), 583–616. Https://Doi.Org/10.5840/Beq201020439

[14]. Brown, M. E., & Treviño, L. K. (2006). Ethical Leadership: A Review And Future Directions. The Leadership Quarterly, 17(6), 595-616. Https://Doi.Org/10.1016/J.Leaqua.2006.10.004

[15]. Brown, M. E., Treviño, L. K., & Harrison, D. A. (2005). Ethical Leadership: A Social Learning Perspective For Construct Development And Testing. Organizational Behavior And Human Decision Processes, 97(2), 117-134. Https://Doi.Org/10.1016/J.Obhdp.2005.03.002

[16]. Deci, E. L., & Ryan, R. M. (2000). The "What" And "Why" Of Goal Pursuits: Human Needs And The Self-Determination Of Behavior. Psychological Inquiry, 11(4), 227–268. Https://Doi.Org/10.1207/S15327965PLI1104_01

[17]. Dhar, R. L. (2016). Ethical Leadership And Its Impact On Service Innovative Behavior: The Role Of LMX And Job Autonomy. Tourism Management, 57, 139-148. Https://Doi.Org/10.1016/J.Tourman.2016.05.011
[18]. Dust, S. B., Resick, C. J., Margolis, J. A., Mawritz, M. B., & Greenbaum, R. L. (2018). Ethical Leadership And Employee Success: Examining The Roles Of Psychological Empowerment And Emotional Exhaustion. The Leadership Quarterly, 29(5), 570-583. Https://Doi.Org/10.1016/J.Leaqua.2018.02.002
[19]. Eisenbeiss, S. A. (2012). Re-Thinking Ethical Leadership: An Interdisciplinary Integrative Approach. The Leadership Quarterly, 23(5), 791-808. Https://Doi.Org/10.1016/J.Leaqua.2012.03.001
[20]. Etikan, I., Musa, S. A., & Alkassim, R. S. (2016). Comparison Of Convenience Sampling And Purposive Sampling. American Journal Of Theoretical And Applied Statistics, 5(1), 1-4. Https://Doi.Org/10.11648/J.Ajtas.20160501.11
[21]. Gagné, M., & Deci, E. L. (2005). Self-Determination Theory And Work Motivation. Journal Of Organizational Behavior, 26(4), 331-362. Https://Doi.Org/10.1002/Job.322
[22]. Hair Jr, J. F., Hult, G. T. M., Ringle, C. M., Sarstedt, M., Danks, N. P., & Ray, S. (2021). Partial Least Squares Structural Equation Modeling (PLS-SEM) Using R: A Workbook (P. 197). Springer Nature.
[23]. Hair, J. F., Risher, J. J., Sarstedt, M., & Ringle, C. M. (2019). When To Use And How To Report The Results Of PLS-SEM. European Business Review, 31(1), 2-24. Https://Doi.Org/10.1108/EBR-11-2018-0203
[24]. Hofstede, G. (2001). Culture's Consequences: Comparing Values, Behaviors, Institutions And Organizations Across Nations (2nd Ed.). Sage Publications.
[25]. Islam, T., Islam, R., Pitafi, A. H., Xiaobei, L., Rehmani, M., Irfan, M., & Mubarak, M. S. (2021). The Impact Of Corporate Social Responsibility On Customer Loyalty: The Mediating Role Of Corporate Reputation, Customer Satisfaction, And Trust. Sustainable Production And Consumption, 25, 123-135. Https://Doi.Org/10.1016/J.Spc.2020.07.019
[26]. Janssen, O. (2000). Job Demands, Perceptions Of Effort-Reward Fairness And Innovative Work Behaviour. Journal Of Occupational And Organizational Psychology, 73(3), 287-302. Https://Doi.Org/10.1348/096317900167038
[27]. Javed, B., Abdullah, I., Zaffar, M. A., Haque, A. Ul, & Rubab, U. (2019). Inclusive Leadership And Innovative Work Behavior: The Role Of Psychological Empowerment. Journal Of Management & Organization, 25(4), 554–571. Https://Doi.Org/10.1017/Jmo.2018.50
[28]. Liu, X., Huang, Y., Kim, J., & Na, S. (2023). How Ethical Leadership Cultivates Innovative Work Behaviors In Employees? Psychological Safety, Work Engagement And Openness To Experience. Sustainability, 15(4), 3452. Https://Doi.Org/10.3390/Su15043452
[29]. Mubarak, N., Khan, J., Safdar, S., Muhammad, S., & Riaz, A. (2022). Ethical Leadership In Project-Based Organizations Of Pakistan: The Role Of Psychological Empowerment And Islamic Work Ethics. Management Research Review, 45(3), 281-299. Https://Doi.Org/10.1108/MRR-08-2020-0536
[30]. Nasifoglu Elidemir, S., Ozturen, A., & Bayighomog, S. W. (2020). Innovative Behaviors, Employee Creativity, And Sustainable Competitive Advantage: A Moderated Mediation. Sustainability, 12(8), 3295. Https://Doi.Org/10.3390/Su12083295
[31]. Ng, T. W. H., & Feldman, D. C. (2015). Ethical Leadership: Meta-Analytic Evidence Of Criterion-Related And Relative Validity. Journal Of Applied Psychology, 100(3), 948-965. Https://Psycnet.Apa.Org/Doi/10.1037/A0038246
[32]. Sarwar, N., Haider, S., Akhtar, M. H., & Bakhsh, K. (2023). Moderated-Mediation Between Ethical Leadership And Organizational Citizenship Behavior: The Role Of Psychological Empowerment And High Performance Managerial Practices. Management Research Review, 46(5), 649-666. Https://Doi.Org/10.1108/MRR-07-2021-0528
[33]. Scott, S. G., & Bruce, R. A. (1994). Determinants Of Innovative Behavior: A Path Model Of Individual Innovation In The Workplace. Academy Of Management Journal, 37(3), 580-607. Https://Doi.Org/10.5465/256701
[34]. Seibert, S. E., Wang, G., & Courtright, S. H. (2011). Antecedents And Consequences Of Psychological And Team Empowerment In Organizations: A Meta-Analytic Review. Journal Of Applied Psychology, 96(5), 981-1003. Https://Doi.Org/10.1037/A0022676
[35]. Spreitzer, G. M. (1995). Psychological Empowerment In The Workplace: Dimensions, Measurement, And Validation. Academy Of Management Journal, 38(5), 1442-1465.
[36]. Tu, Y., & Lu, X. (2013). How Ethical Leadership Influence Employees' Innovative Work Behavior: A Perspective Of Intrinsic Motivation. Journal Of Business Ethics, 116(3), 441-455. Https://Doi.Org/10.1007/S10551-012-1455-7
[37]. Tu, Y., Lu, X., Choi, J. N., & Guo, W. (2019). Ethical Leadership And Team-Level Creativity: Mediation Of Psychological Safety Climate And Moderation Of Supervisor Support For Creativity. Journal Of Business Ethics, 159(2), 551-565. Https://Doi.Org/10.1007/S10551-018-3839-9
[38]. Walumbwa, F. O., Mayer, D. M., Wang, P., Wang, H., Workman, K., & Christensen, A. L. (2011). Linking Ethical Leadership To Employee Performance: The Roles Of Leader-Member Exchange, Self-Efficacy, And Organizational Identification. Organizational Behavior And Human Decision Processes, 115(2), 204-213. Https://Doi.Org/10.1016/J.Obhdp.2010.11.002
[39]. Zhang, X., & Bartol, K. M. (2010). Linking Empowering Leadership And Employee Creativity: The Influence Of Psychological Empowerment, Intrinsic Motivation, And Creative Process Engagement. Academy Of Management Journal, 53(1), 107-128.
[40]. Preacher, K. J., & Hayes, A. F. (2008). Asymptotic And Resampling Strategies For Assessing And Comparing Indirect Effects In Multiple Mediator Models. Behavior Research Methods, 40(3), 879–891.
[41]. Zhao, X., Lynch, J. G., & Chen, Q. (2010). Reconsidering Baron And Kenny: Myths And Truths About Mediation Analysis. Journal Of Consumer Research, 37(2), 197–206.
[42]. Preacher, K. J., & Hayes, A. F. (2008). Asymptotic And Resampling Strategies For Assessing And Comparing Indirect Effects In Multiple Mediator Models. Behavior Research Methods, 40(3), 879–891.
[43]. Zhao, X., Lynch, J. G., & Chen, Q. (2010). Reconsidering Baron And Kenny: Myths And Truths About Mediation Analysis. Journal Of Consumer Research, 37(2), 197–206.